New

The Right Connection®

Chlorine Check Valves

1-1/4” Excess Flow Check Valve
1-1/4” Hi-flow Excess Flow Check Valve

Excess flow

Features

- Robust design, no welded pins to break
- Easily removable 3/4” hex plug
- Serialized for traceability
- Meets CI Pamphlet 166 design
- AAR – E242122

Materials

- Body: Monel® M35-1
- Plug: Monel® 400
- Ball: tungsten carbide

Specifications

- Maximum flow rate
  - R-C125M125XX000: 15,000 lbs/hr chlorine
  - R-C300M125XX000: 38,000 lbs/hr chlorine
- Operating temperature range: **-40°F (-40°C)** to **350°F (177°C)**

Additional Design Testing – Not Required by AAR

- Shock: =/- 20G, 11ms, half sine wave, 3 positive pulses, 3 negative in x and y axis
- Vibration: 5G for 8 hours over a frequency sweep of 3-200 Hz

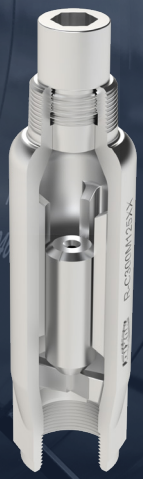

Hi-flow

Part #	Description
R-C125M125XX000	1-1/4” excess flow check valve
R-C300M125XX000	1-1/4” hi-flow excess flow check valve

Dixon

1 Dixon Square
Chestertown, MD 21620
ph: 877.963.4966
fx: 800.283.4966
dixonvalve.com

Technical Information

The Right Connection®

Materials

1-1/4” Excess Flow Check Valve: R-C125M125XX000

No.	Description	Material
1	body	Monel
2	plug	Monel
3	ball	tungsten carbide

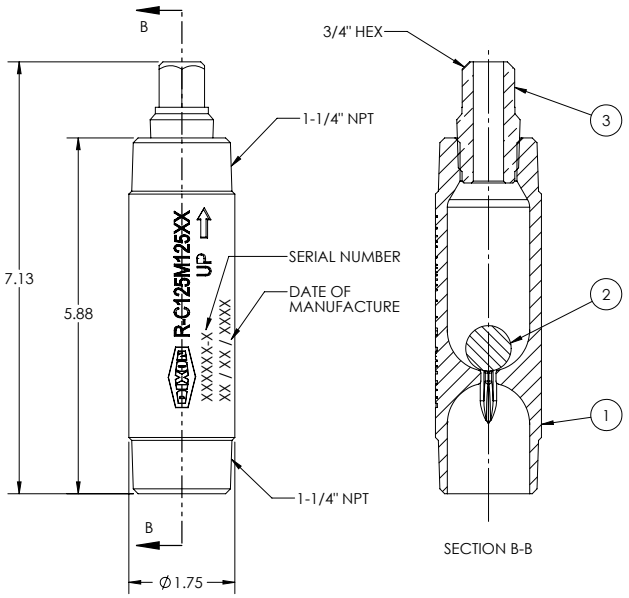

1-1/4” Hi-flow Excess Flow Check Valve: R-C300M125XX000

No.	Description	Material
1	body	Monel
2	float	Monel
3	plug	Monel

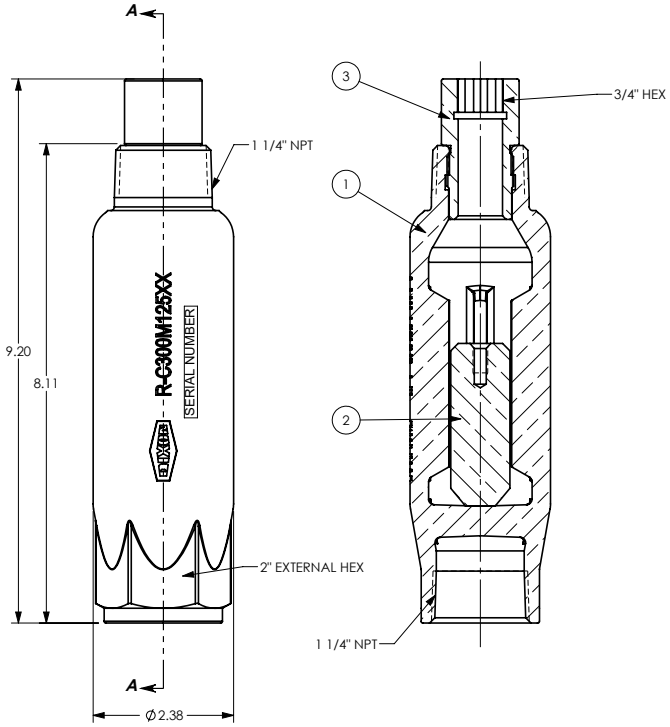

Warning & Safety

Dixon® valves are designed to work safely for their intended use. Failure to know and understand the intended use or to consider the size, temperature, application, media, pressure, and manufacturers recommendations when selecting the proper valve assembly components can result in accidents and injuries, including death and serious and permanent injuries. Dixon recommends that all valve assemblies be tested in accordance with ASME and API recommendations and be inspected regularly to ensure that their use remains appropriate and that they are not damaged.

At no charge, Dixon is available to consult, train, and recommend the proper selection and application of all valves we sell. We strongly recommend that distributors and end users make use of Dixon’s Testing and Recommendation Services. Contact Dixon to learn more.

© 2026 DVCC • CHLORINECHECKVALVES_326