Weld Elbows

90° Clamp x Weld Elbows – B2CM

621
63-04

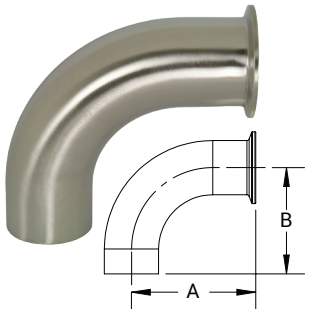

Tube O.D.	A (in)	B (in)	Nominal Wall (in)	304 Stainless Steel Part #	316L Stainless Steel Part #
1/2"	3.50	3.00	.065	---	B2CM-R50
3/4"				---	B2CM-R75
1"	2.56	2.06		B2CM-G100	B2CM-R100
1-1/2"	3.44	2.94		B2CM-G150	B2CM-R150
2"	4.56	4.06		B2CM-G200	B2CM-R200
2-1/2"	5.69	5.19		B2CM-G250	B2CM-R250
3"	6.81	6.31		B2CM-G300	B2CM-R300
4"	8.94	8.31	.083	B2CM-G400	B2CM-R400
6"	13.34	12.46	.109	---	B2CM-R600
8"	12.88	12.00		---	B2CM-R800

45° Clamp x Weld Elbows – B2KM

621
63-04

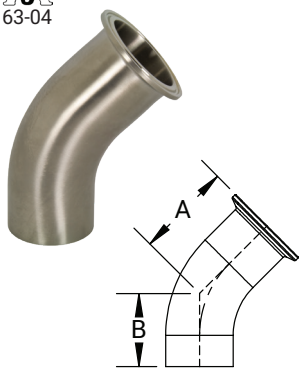

Tube O.D.	A (in)	B (in)	Nominal Wall (in)	304 Stainless Steel Part #	316L Stainless Steel Part #
1"	1.69	1.19	.065	B2KM-G100	B2KM-R100
1-1/2"	2.13	1.63		B2KM-G150	B2KM-R150
2"	2.81	2.31		B2KM-G200	B2KM-R200
2-1/2"	3.50	3.00		B2KM-G250	B2KM-R250
3"	4.19	3.69		B2KM-G300	B2KM-R300
4"	5.44	4.81	.083	B2KM-G400	B2KM-R400

621
63-04

M

90° Threaded Bevel Seat x Weld Elbows – B2T

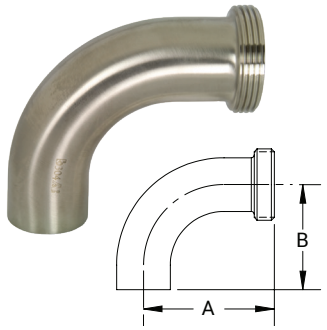

Tube O.D.	A (in)	B (in)	Nominal Wall (in)	304 Stainless Steel Part #
1"	2.78	2.06	.065	B2T-G100
1-1/2"	3.66	2.94		B2T-G150
2"	4.81	4.06		B2T-G200
2-1/2"	6.06	5.19		B2T-G250
3"	7.22	6.31		B2T-G300
4"	9.34	8.31	.083	B2T-G400

621
63-04

90° Plain Bevel Seat with Hex Nut x Weld Elbows – B2FP

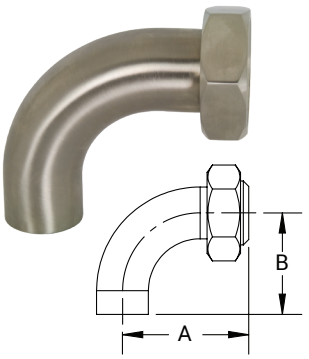

Tube O.D.	A (in)	B (in)	Nominal Wall (in)	304 Stainless Steel Part #
1"	2.78	2.06	.065	B2FP-G100
1-1/2"	3.66	2.94		B2FP-G150
2"	4.81	4.06		B2FP-G200
2-1/2"	6.06	5.19		B2FP-G250
3"	7.22	6.31		B2FP-G300
4"	9.34	8.31	.083	B2FP-G400